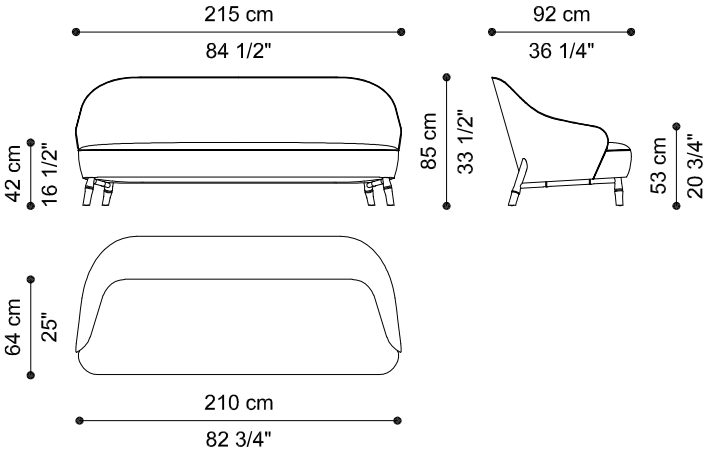
215 cm
84 1/2"
92 cm
36 1/4"
42 cm
16 1/2"
85 cm
33 1/2"
53 cm
20 3/4"
64 cm
25"
210 cm
82 3/4"