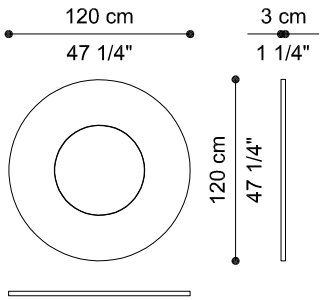
120 cm
47 1/4"
3 cm
1 1/4"
120 cm
47 1/4"