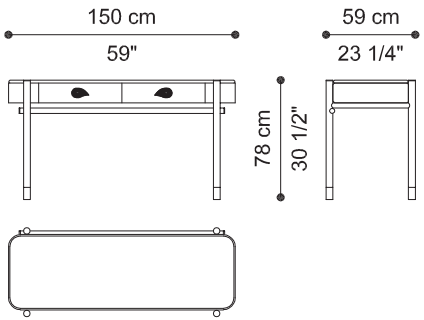
150 cm
59"
59 cm
23 1/4"
78 cm
30 1/2"