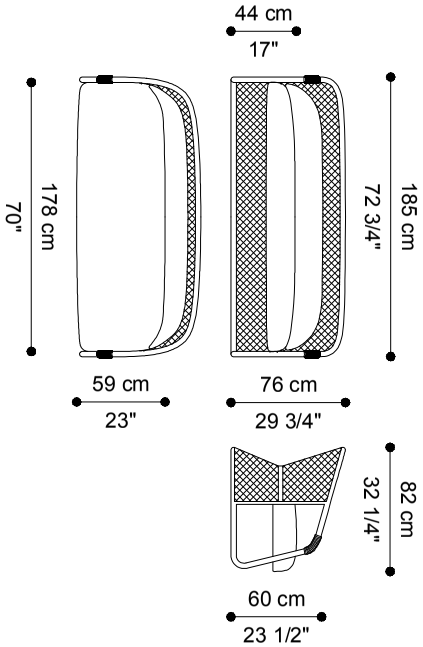
44 cm
17"
178 cm
70"
185 cm
72 3/4"
59 cm
23"
76 cm
29 3/4"
82 cm
32 1/4"
60 cm
23 1/2"