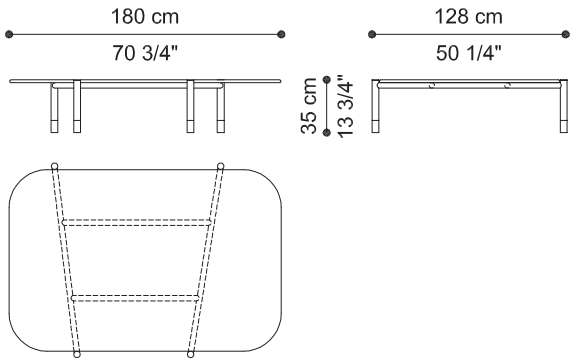
180 cm
70 3/4"
128 cm
50 1/4"
35 cm
13 3/4"